SANY

SRC8130C

Rough Terrain Crane

Max Rated Lifting Capacity
130USt/10ft

Max Boom Length
49 m+18 m - 161 ft+59 ft

Max Lifting Moment
3,648 KN.m - 2,690,627 lbf-ft

Engine Rated Power
239 KW @ 2,200 rpm -
321 hp @ 2,200 rpm

Engine Emission
T4F

KEY FEATURES

- Equipped with a U shaped, 5 section boom. Fully extended length is 161 ft. The boom telescope system has a double cylinder with rope mechanism. The 2-section folding jibs fully extended length is 59ft, an industry leader.
- With a gross weight of 77t, the machine has self-assembly/disassembly technology. The auxiliary hoist, counterweight and front/rear outrigger boxes can be removed for transport. This reduces the transport weight to approximately 52.5t, which meets transportation regulations.
- With the output power at 321hp, the T4F U.S. Cummins engine features strength and economy.
- The fully electronic control system provides an operator friendly interface, precise function movement and convenient troubleshooting.

SRC8130C Dimensions & Specifications

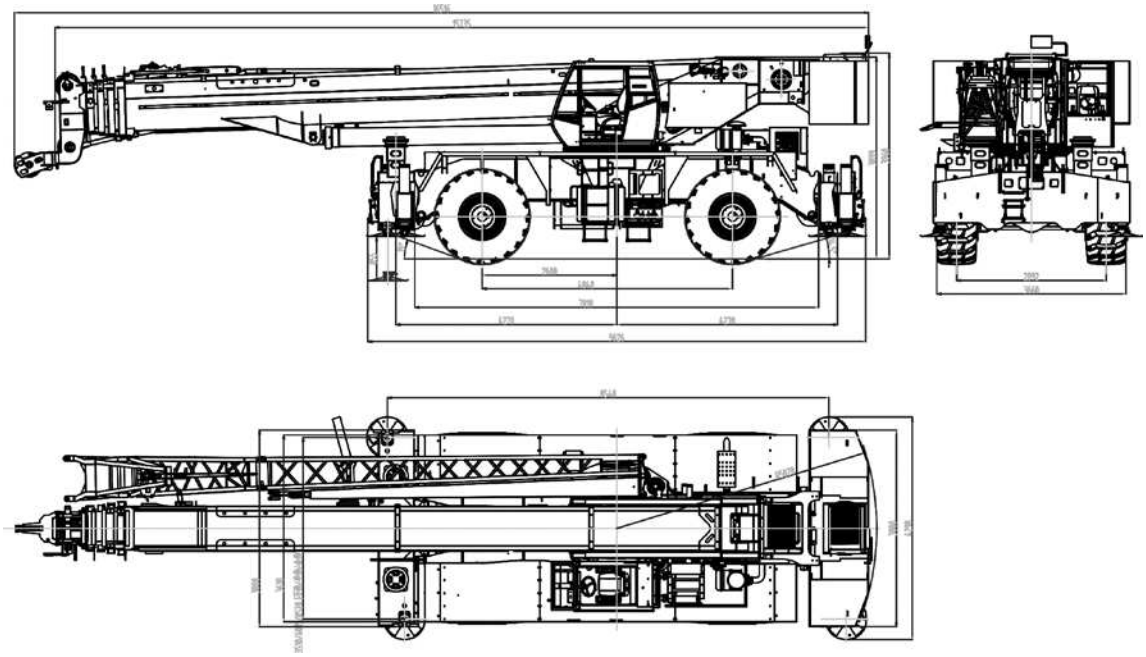

MACHINE PARAMETERS

	Standard	Metric
Outrigger span (vertical x longitude)	28' x 27'11"	8.54 m x 8.52 m
Engine model	Cummins QSL9	
Rated power of engine	320 hp/rpm	239 kw/2200 rpm
Rated torque of engine	1050 ft lbs	1424 N.m/1500 rpm
Emission standard	T4F	
Max. traveling speed	15.5 mph	25 km/h
Overall mass	169,791 lbs	77,016 kg
Front axle load	84,219 lbs	38,201 kg
Rear axle load	85,572 lbs	38,815 kg
Min. turning radius (4 wheels)	31'10"	9.7 m
Min. ground clearance	20"	510 mm
Approach angle	19°	
Departure angle	15°	
Braking distance (12 mph)	21'4"	6.5 m
Fuel consumption	3.6 mpg	65 L/100 km
Max. lifting speed of single rope of main winch (empty load)	442 ft/min	135 m/min
Max. lifting speed of single rope of auxiliary winch (empty load)	410 ft/min	125 m/min
Full extension/retraction time of boom	160 sec/175 sec	
Luffing time of boom	67 sec	
Max. slewing speed	1.78 rpm	
Full extension/retraction time of outrigger	20 sec/25 sec	
Fully lifting/descending time of outrigger	30 sec/45 sec	
Maximum rated lifting capacity	130 T	118 mt
Minimum rated reach	10'	3.05 m

SRC81302202017

SANY America Inc.
318 Cooper Circle | Peachtree City, GA 30269
T: 678-251-2810 | F: 770-632-7820